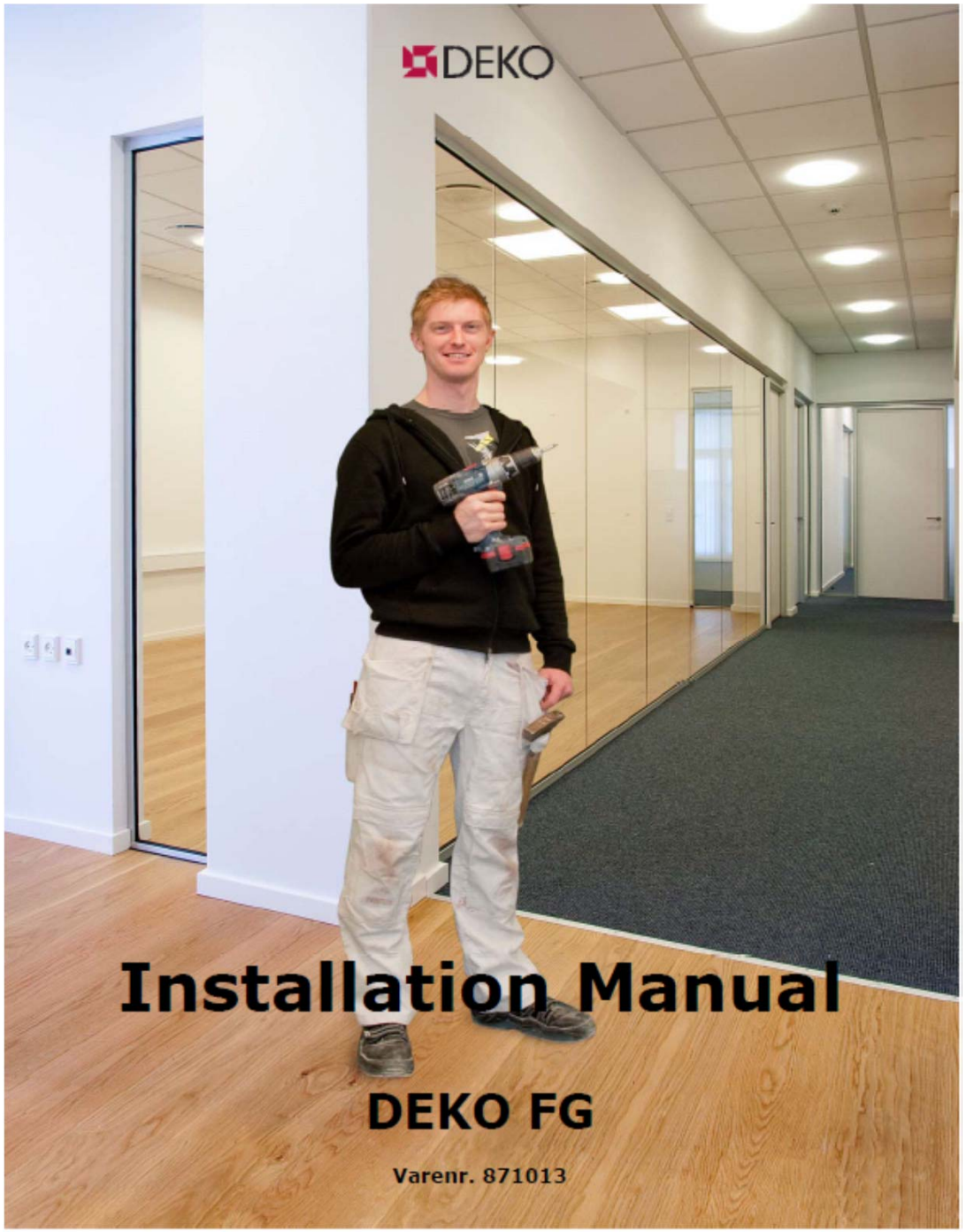

Installation Manual

DEKO FG

Varenr. 871013

This installation manual is based on DEKO FG fully glazed partitions with 10 or 12mm tempered/laminated glass.
Same procedure is followed for 15mm tempered glass and 16,8 laminated glass.

1. Measuring

First part of installation is technically identical to installation of other types of partitions.
Below-mentioned will follow the drawing on page 11 and profile description on page 10

2. Install floor and ceiling profiles

Floor and ceiling profiles, type AGGP, 40mm , will be delivered on site with rubber joints factory applied.
Profiles have Ø6mm holes each 300mm.
Fixing by nailplugs each max. 600mm.

(At T- connections – please look at section 8.1.)

Profile extension is done by means of metal couplings (775636)
If there is a risk of increased settling from adjoining structures, the telescopic profile AGGPT is utilized.

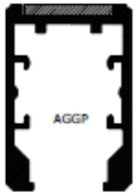

3. Install Wall starters

Wall starter profiles, type AGVP, 30mm, will be delivered on site with rubber joints factory applied.
Profiles have Ø6mm holes each 300mm.
Fixing by nailplugs each max. 600mm.
A wall starter profile is installed between floor-and ceiling profiles

3.1. Wall starter - Open

If a door frame is fitted against one pcs. of glass, or the partition only consists of one pcs. of glass, it is necessary to use an open wall starter, type AGVPA/AGVPT.
Profiles have Ø6mm holes each 300mm.
Fixing by nailplugs each max. 600mm

4. Door holes.

Floor profile AGGP is cut to create door holes.
Primarily 2 types of doors can be installed with DEKO FG.

1) Pivot glass door (NO frame)
2) Doors, glass or solid, with hinges fixed in DEKO alu-frame.

Ad. 1) Floor rail is to be cut in lengths of door width plus 6-7mm.
Endcover plate is then fixed at AGGP profile.

Ad. 2) If doors are fixed in a frame, either glass or solid doors, the AGGP profile is discontinued at the frame's outer edge which then acts as the door hole in the AGGP profiles.

4.1. Door installation

Pivot doors

Floor pivots are installed with center 57mm from the glass edge on hinge side.
The pivot can be either a simple pivot or with a mechanical floor closer.
This type of door closer must be installed in the floor.

If the door leaf is at full height with the ceiling profile AGGP – a top pivot must be fixed at the AGGP for control of PT20 top mount on the door leaf.
A shaped wooden profile of door width is installed in the AGGP profile – and the finishing AGLT profile is installed between the fixed glass and the pivot.

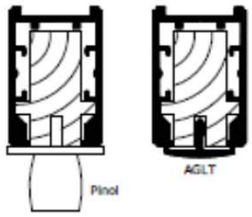

If the door leaf does not reach the ceiling but has a glass pane above – this must be fixed with PT60 or PT62 corner fittings on the open side and PT40 fittings on the hinge side.
When fixing with PT fittings, the height of door leaf and fixed glass must be aligned.
Glass above the door leaf must be centered with a seem of 1-2 mm space around it and joints in the sides are not closed with silicone joint strips.

Framed door

Frames in FG-partitions are with a rabbet of 34 mm for 10 mm fully glazed doors and/or with a 40 mm rabbet for solid door leaves.
Aluminium frames are assembled on site.
Frame head and sides are cut at 45 degree angle and frame head is fixed to side frames by means of screws.

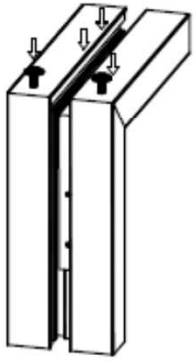

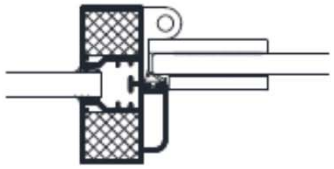

In the rear side of door frame is a groove for installation of 2 steel angles, which will be fixed with pivot screws on one flange and the other one against the floor by AGGP profile.
The angle is fixed by nail plugs.

The groove in AGGP and door frame profile must align precisely as the glass will be installed in this groove.

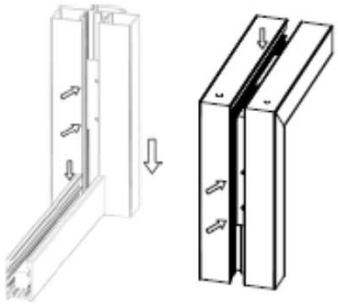

Same type of angle profiles are fixed on both sides of top frame
with the pivot screws turning downwards and fixed so
one angle edge is touching the glass.
This will keep the frame top from moving sideways.

When door frame is at full height with the partitions, the angles are fixed in the same way at floor level by fixing the frame with pivot screws and 2 screws in the AGGP profile's top edge.

5. Joints between glass panes

The silicone strip (self-adhesive) can profitably be applied to the glass before it is installed in the profile.

It is recommended that you place the glass in a vertical position lengthwise on a suitable support, e.g. a piece of plywood.

The silicone strips are applied with a pilot block of wood which matches the glass thickness. Installation is most easily done in a clean environment to avoid dust in the joints.

When the silicone strip is mounted on the glass edge and all panes are placed exactly in sync, the foil is loosened at the top and approx. 5 cm down. The foil is pulled from between the glass panes when they are all placed correctly in vertical position.

The silicone joint strip is stocked in 7,5mm width (for 10mm glass) and 9mm width (for 12mm glass)
The 7,5mm strip comes in 2mm and 3mm thickness, while the 9mm comes in a thickness of 1,5mm, 2mm and 3mm.
(For 15mm and 17mm glass, a strip of 3x12mm is utilized)

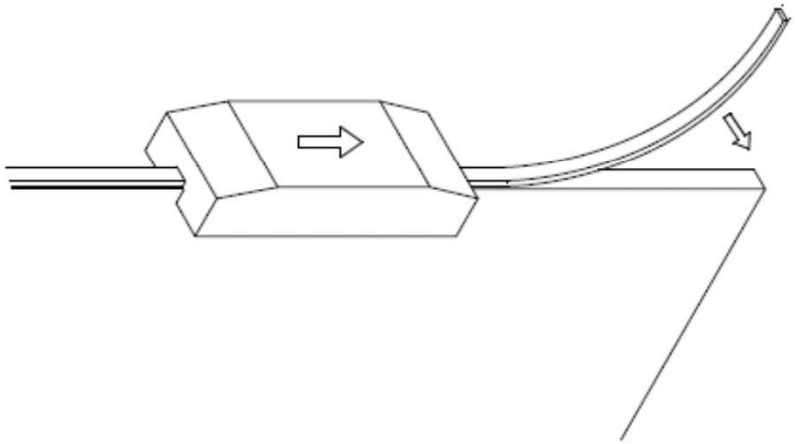

6. Glass installation

When all AGGP profiles are installed along the floor and ceiling, the glass installation commences.

2 DEKO PVC glass chocks per glass are placed approx.50 mm from the glass edge in the AGGP profile . It is possible to adjust the DEKO PVC glass chocks with small plastic discs. The upright fit is very important, as the joining of the glass panes must be completely accurate.

When the chocking is in place in the floor profile, the glass is lifted into the ceiling profile and lowered into the chock in the floor profile.

It is vital that all glass panes are placed precisely in vertical position before they are assembled with the clear double-adhesive silicone strips (see section 5)

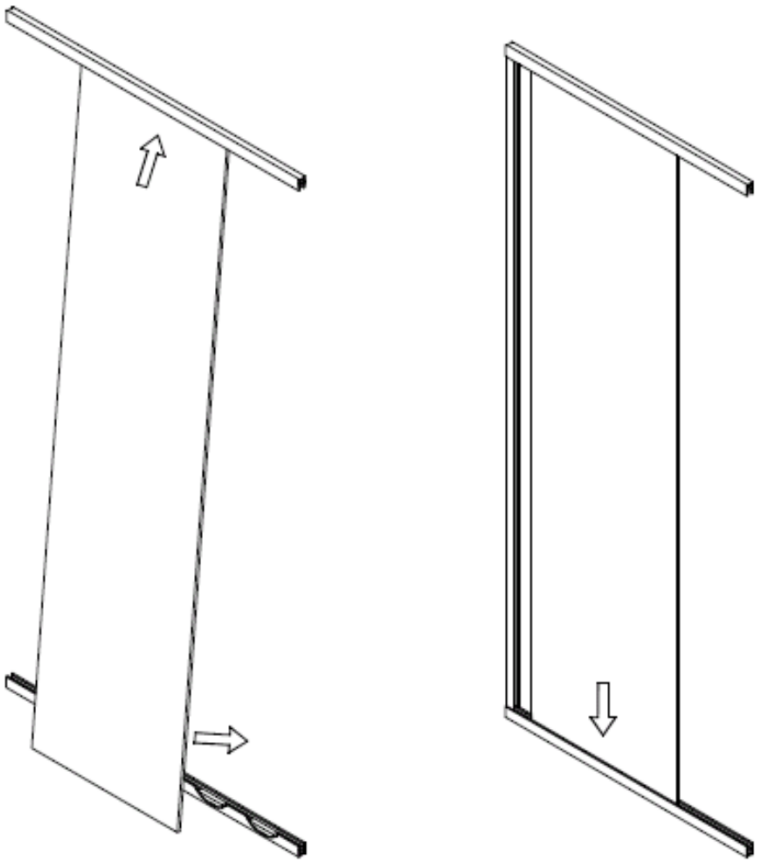

6.1. **Glass installation** (on glass surface)

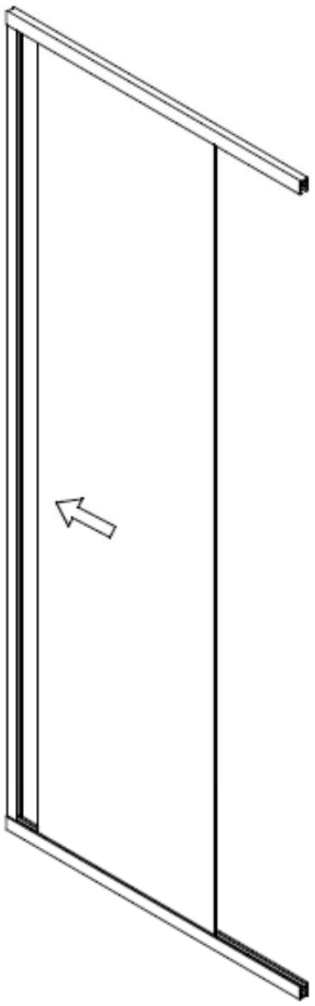

The individual glass panes are lifted carefully into place and the vertical parallel lines are re-examined.

If the lines of the joint are not vertical and parallel, the chocking must be corrected.

This can be done by lifting the glass out of the AGGP profile and adjusting it with small plastic discs and, if necessary, shifting the chocks slightly.

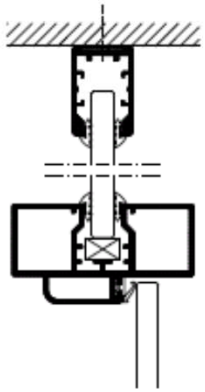

6.2. **Glass installation (by doors)**

If a door features an overhanging glass pane, this is placed above the door frame by way of chocking. The glass is mounted with silicone strips on the vertical edges.

Frame angles are used at the head edge of the door frame both in doors with and without overhanging glass (see section 4.1).

Pivot-hung glass doors with overhanging glass panes are **NOT** mounted with silicone strips between the overhanging glass and the glass side of the adjoining profile.

As the glass is joined at the sides, 2-sided suction cups are placed at the height's tripartite point, one on each pane of glass which are then leveled with a piece of wood between the suction cups. This ensures evenness between the individual glass panes.

Glass can have a tendency to curve slightly, and if two adjoining glass panes curve opposite each other, they cannot be joined at level.
It is vital to ensure evenness in the surface when joining the glass panes with silicon strips.

When the glass is pushed together, 2 3-sided suction cups can favorably be used to pull the glass together and compress the silicon strip slightly.

Make sure to be precise when installing glass. Once the glass panes are joined with the silicone strip, they can only be separated by cutting out the strip.

7. Fixing of glass

To fix the glass pane, a line of rubber packing is applied. This is installed in all aluminium profiles and aluminium frames in order to ensure the wall stability and density.

The rubber packing can profitably be applied from both sides of the wall at the same time. Make sure to inspect the rubber packing during installation so ensure that the wall appears flawless.

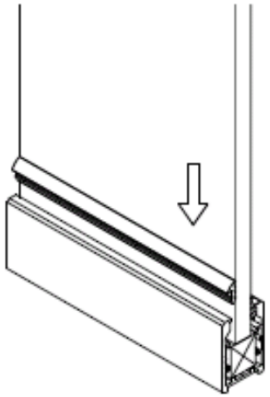

8. Aluminium profile joints, T-connections and corner joints

Profile connections are labeled AGLT and AGLA, and are 20mm aluminium profiles which gather on top of the glass through friction.

The touching surfaces of the profile joints are fixed with 1,5x5mm broad joining strips so density of the construction is reached while the joining strips ensure friction against the glass.

Other profile joints of this type are for 90 gr. and 135 gr. corners and are labeled:

AGHLT-90 gr. and AGHLA-90 gr.

AGHLT-135 gr. and AGHLA-135 gr.

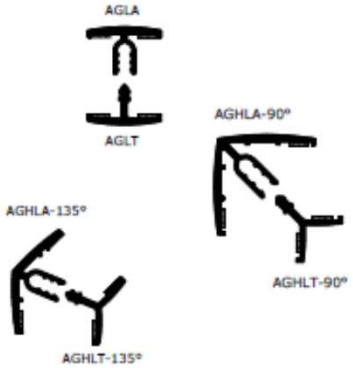

For T-connections, the aluminum profile AGTT is connected to the AGLT which gives the same visual result as a normal surface connection.

The AGTT profile is utilized against the glass surface in the traversing wall and is finished with a black rubber profile, in the same way as the floor, ceiling and wall starter profiles.

If the wall surface is finished with a silicon strip as explained in section 5, it is recommended that aluminum profile joints are used in all corners and T-connections

8.1. **T-connections** (with silicon joint)

When using T-connections with silicone strips, make a notch 15 mm wide in the AGGP profile as illustrated below.

It is vital that this is done exactly at the central line of the traversing wall.

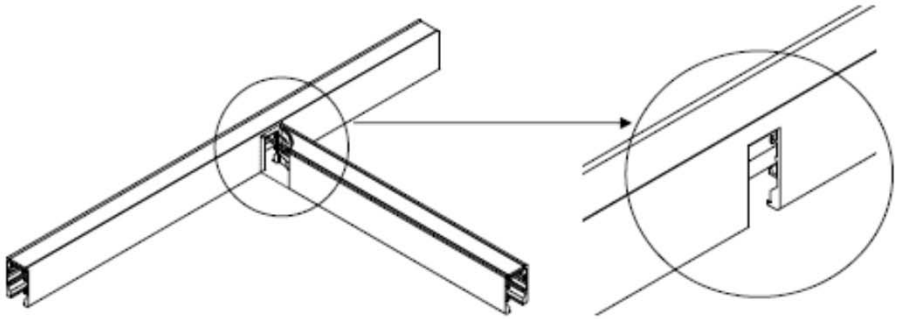

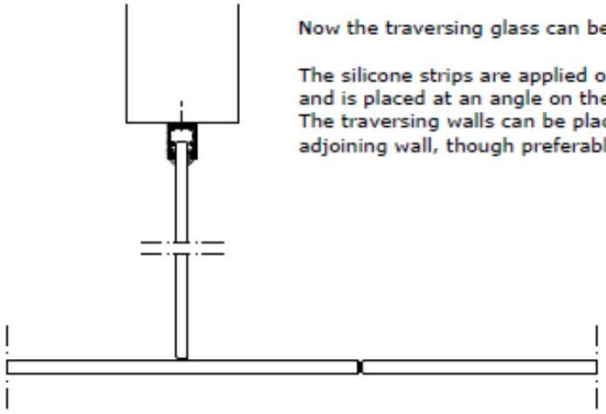

Now the traversing glass can be installed as in section 7.

The silicone strips are applied on one side edge of the glass and is placed at an angle on the adjoining wall, see below. The traversing walls can be placed randomly along the adjoining wall, though preferably not in front of a glass joint.

9. Door installation

Doors, 40 mm solid, are normally mounted as regular doors.
Full glass doors, 10 mm glass, are fixed with rabbet hinges in pre-drilled holes in the glass.
Lock boxes on glass doors are mounted in pre-drilled holes in the glass.
The aluminium frame for both types of doors are fitted with a strike plate.

It is important during installation of fittings to ensure that the height of fitting placement matches.

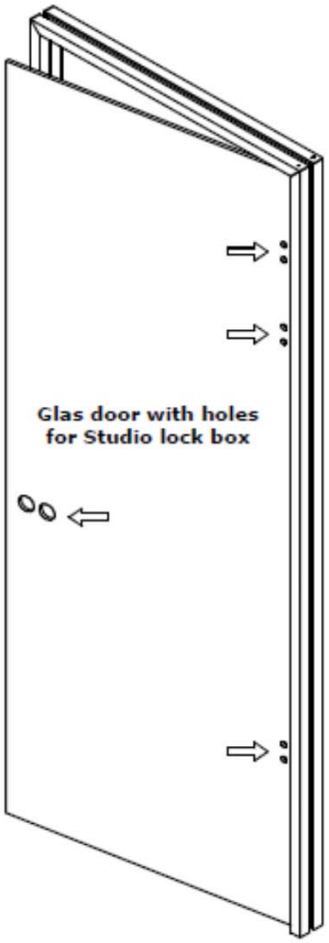

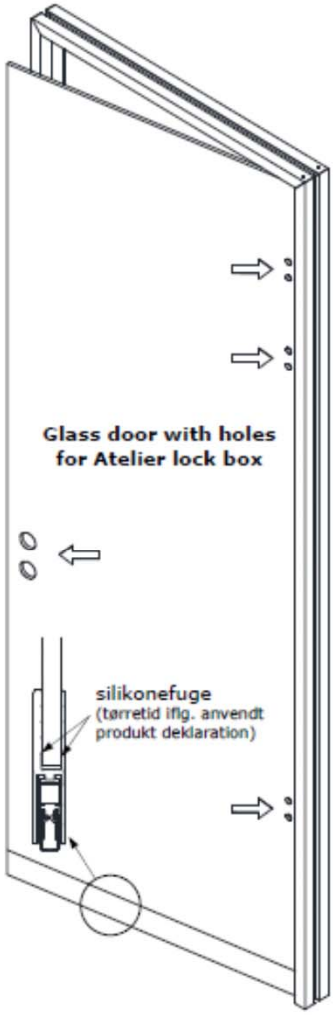

10. Profile specification

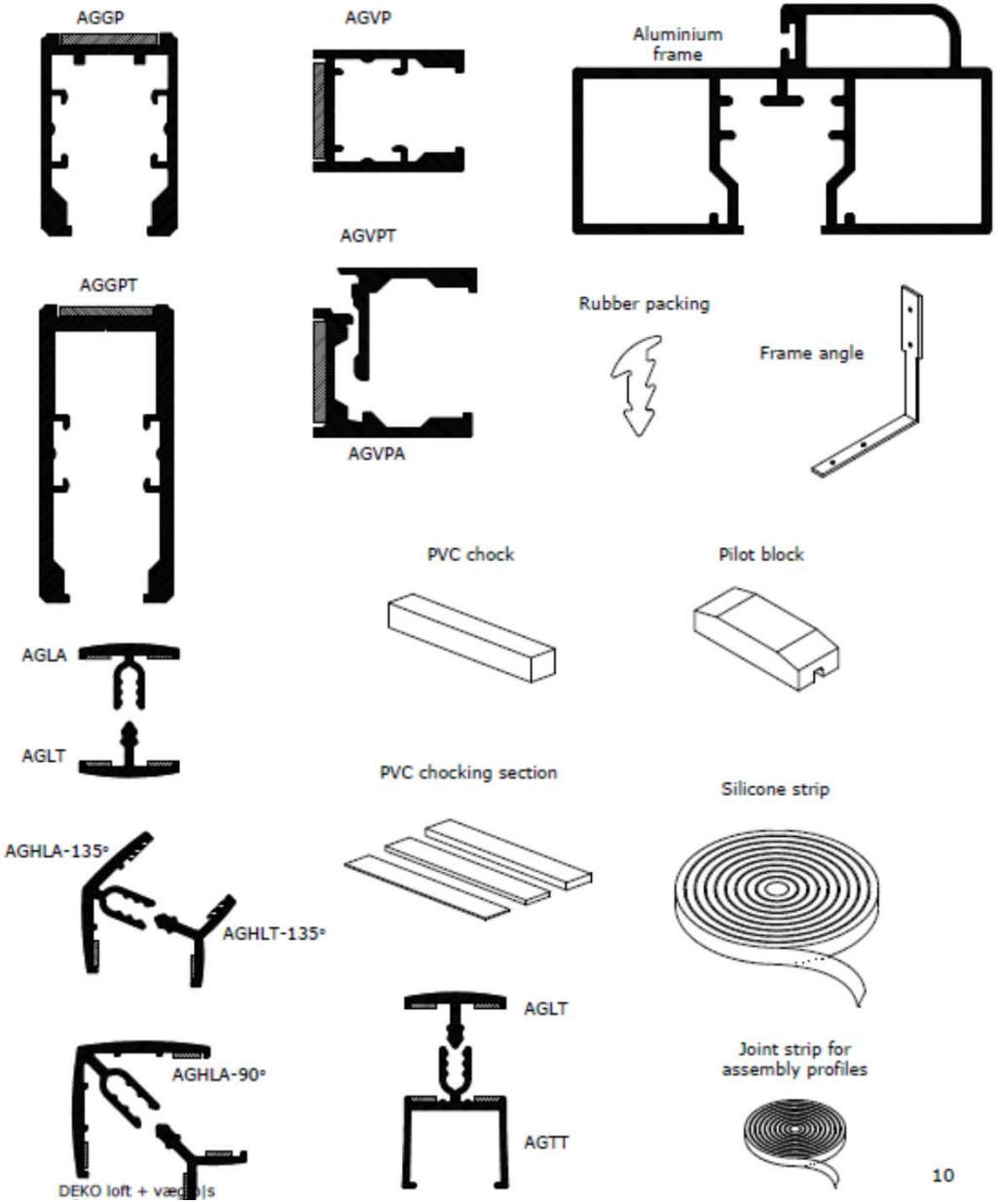
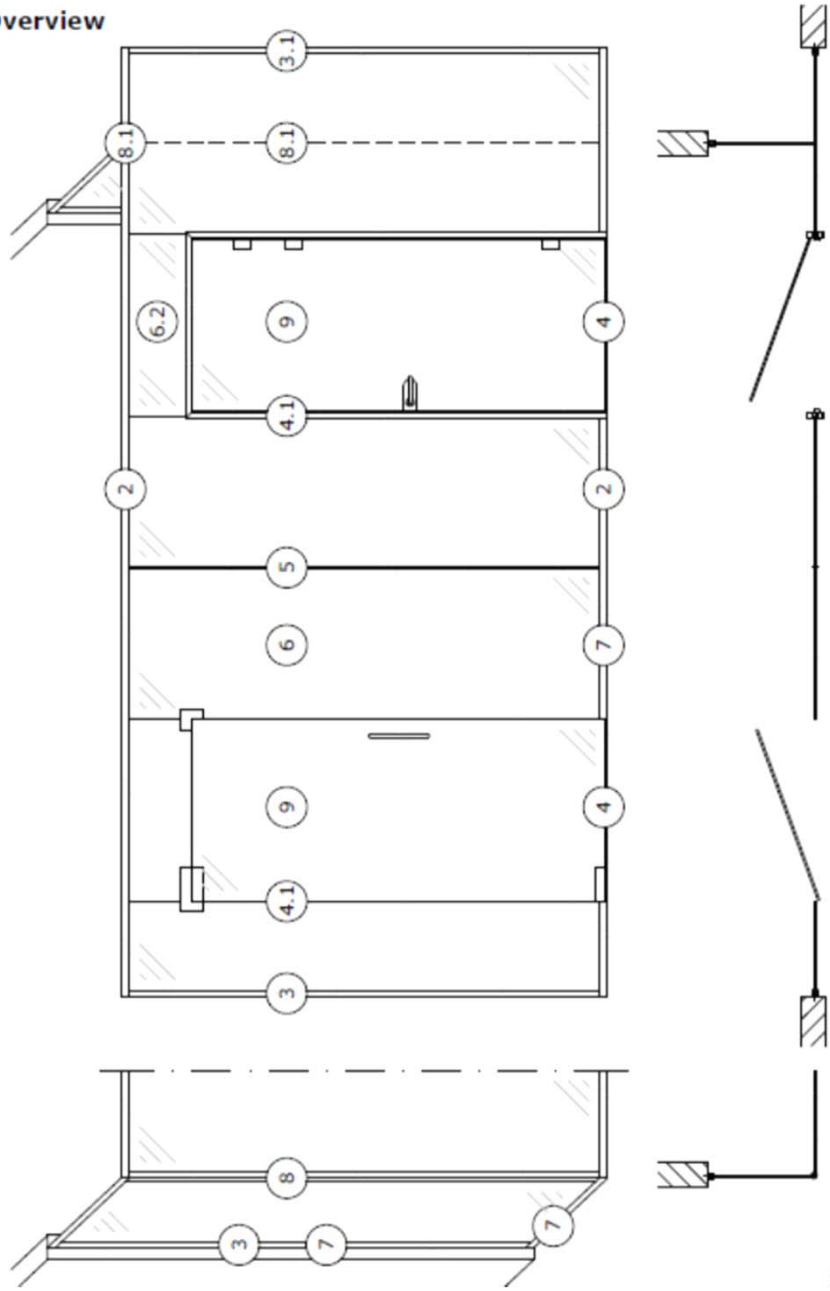
11. Overview